INFRA SHALLOW TILT

IST 13 30 24 CL 76 ST W

Artech Infra Round Tilt Shallow Depth Downlight

Artech Infra recessed architectural fixed LED downlight with ingress protection IP44. Total luminous flux up to 1300 lm with overall luminaire efficacy of 89 lm/W. Supplied with fixed output, DALI digital or phase-cut dimmable driver, optional 3-hour Basic or EMPRO emergency kit. Forged aluminium heat sink with die-cast white or black bezel

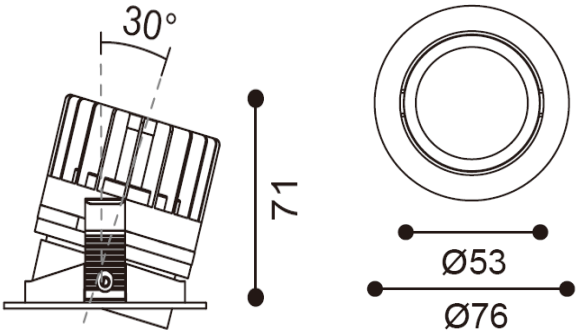

Mounting	Recessed (With Trim)
Lamp Type	LED
Wattage	14.6 W
Lumen Output	1300 lm
Efficacy	89 lm/W
Colour Temperature	3000 K
Beam Angle/Optic	24˚/ Clear
CRI	90+
IP Rating	IP44
Control Gear	Fixed Output
Dimensions	76 Dia x 71 mm
Colour Finish	White
MacAdam	3
Service Lifetime	L80/B10-55,000 Hrs

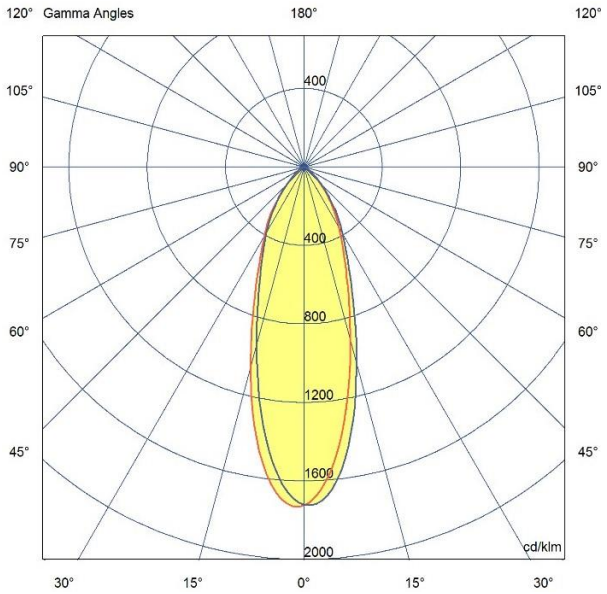

Artech lighting strives to ensure all solutions are supplied with the latest technology, we therefore reserve the right to make technical and design changes without prior notice. Electrical connected load and luminous flux are subject to initial tolerance of up +/- 10%.Colour Temperature is subject to a tolerance of +/-150 Kelvin

St.JohnsRd,MeadowfieldIndustrialEstate,Durham,Co.Durham,DH78RJ-UnitedKingdom|T:+44(0)1913787960-F:+44(0)1913787909-www.artechlighting.com