PELUSA

PRT 05 30 38 M ST W

Artech Pelusa Twin Round Tilt Trim Downlight

Artech Pelusa round LED downlight. Total luminous flux 500 lm with overall luminaire efficacy of 79 lm/W. Supplied with fixed output, DALI / DSI digital dimmable drivers for 6.3 W LED, optional - basic 3hr, self-test or EMPRO emergency kit. Die-cast aluminum body with white frame and white insert. Aluminum reflector and frosted glass for optic.

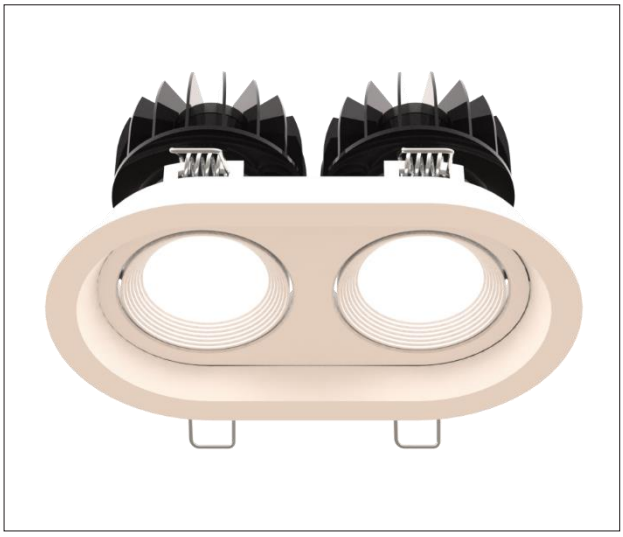

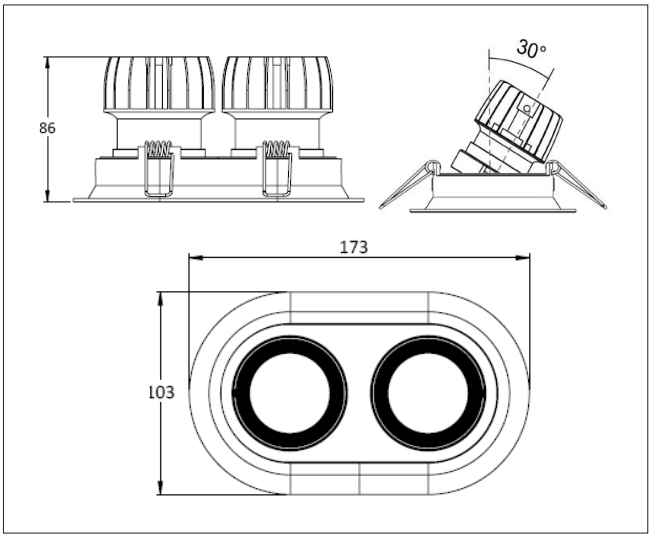

Mounting	Recessed (With Trim)
Lamp Type	LED
Wattage	2 x 6.3 W
Lumen Output	2 x 500 lm
Efficacy	79 lm/W
Colour Temperature	3000 K
CRI	90+
Beam Angle	38°
IP Rating	IP44
Control Gear	Fixed Output
Dimensions	173 x 86 mm
Colour Finish	White
MacAdam	3
Service Lifetime	L80/B10- 55,000 Hrs

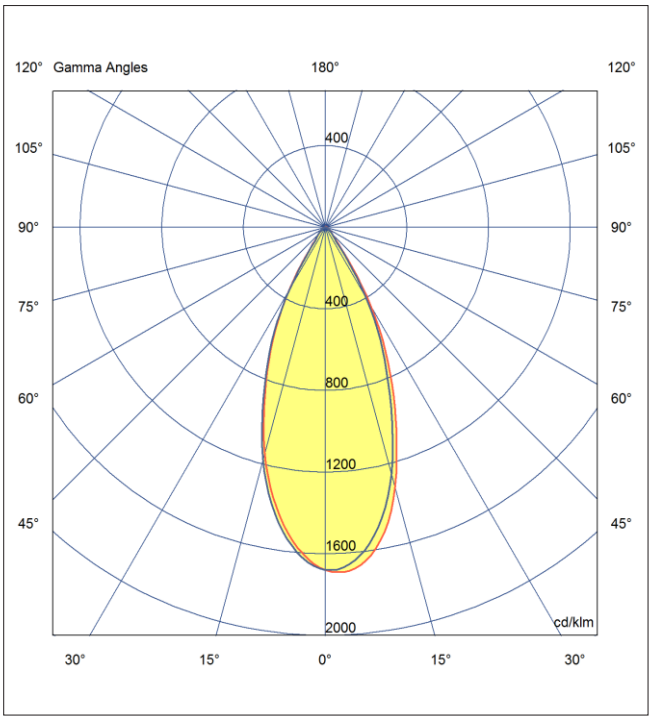

powered by

TRIDONIC

Driver details available upon request

Artech lighting strives to ensure all solutions are supplied with the latest technology, we therefore reserve the right to make technical and design changes without prior notice. Electrical connected load and luminous flux are subject to initial tolerance of up +/- 10%.Colour Temperature is subject to a tolerance of +/-150 Kelvin

St.JohnsRd,MeadowfieldIndustrialEstate,Durham,Co.Durham,DH78RJ-UnitedKingdom|T:+44(0)1913787960-F:+44(0)1913787909-www.artechlighting.com

MADE IN BRITAIN