PELUSA SQUARE

PST 09 30 60 M ST W

Artech Pelusa Twin Square Tilt Trim Downlight

Artech Pelusa Square LED downlight. Total luminous flux 900 lm with overall luminaire efficacy of 86 lm/W. Supplied with fixed output, DALI / DSI digital dimmable drivers for 10.4 W LED, optional - basic 3hr, self-test or EMPRO emergency kit. Die-cast aluminum body with white frame and white insert. Aluminum reflector and frosted glass for optic.

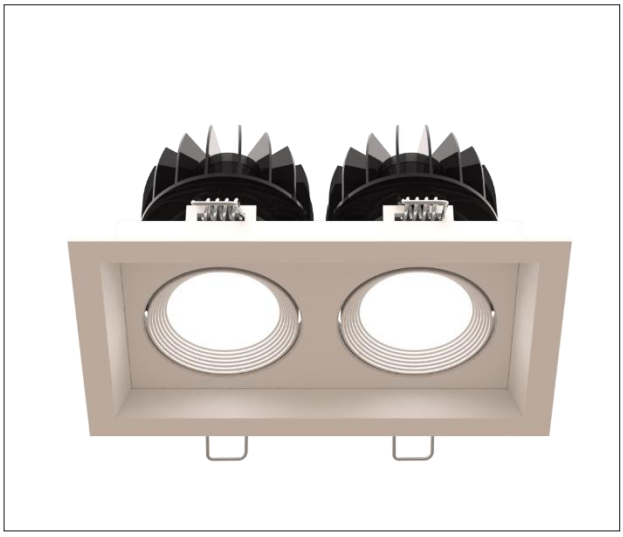

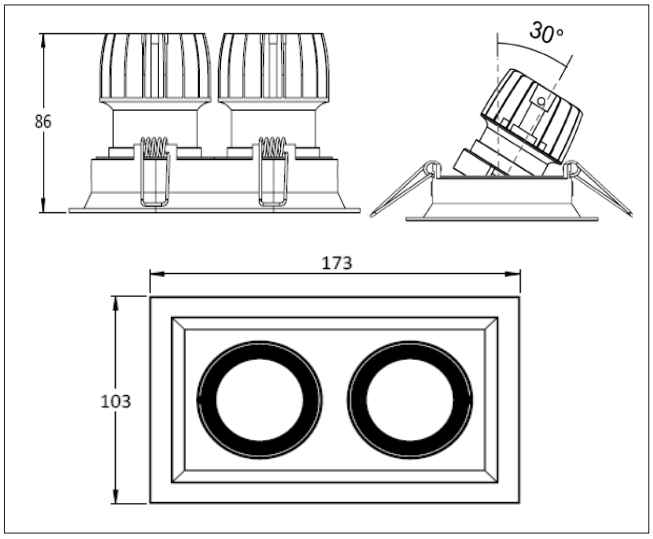

Mounting	Recessed (With Trim)
Lamp Type	2x LED
Wattage	2x 10.4 W
Lumen Output	2x 900 lm
Efficacy	86 lm/W
Colour Temperature	3000 K
CRI	90+
Beam Angle	60°
IP Rating	IP44
Control Gear	Fixed Output
Dimensions	173 x 86 mm
Colour Finish	White
MacAdam	3
Service Lifetime	L80/B10- 55,000 Hrs

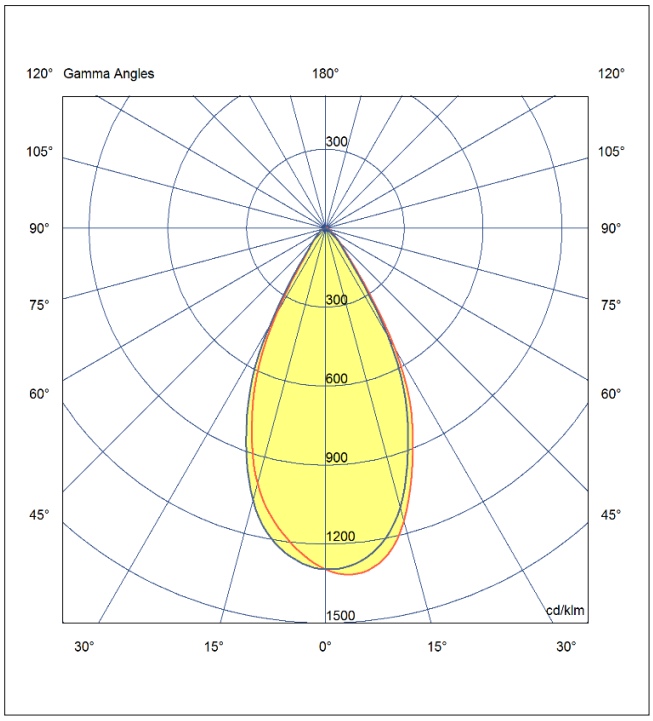

powered by

TRIDONIC

Driver details available upon request

Artech lighting strives to ensure all solutions are supplied with the latest technology, we therefore reserve the right to make technical and design changes without prior notice. Electrical connected load and luminous flux are subject to initial tolerance of up +/- 10%.Colour Temperature is subject to a tolerance of +/-150 Kelvin

St.JohnsRd,MeadowfieldIndustrialEstate,Durham,Co.Durham,DH78RJ-UnitedKingdom|T:+44(0)1913787960-F:+44(0)1913787909-www.artechlighting.com

MADE IN BRITAIN