TENUS ROUND FIX

TRF 05 30 38 CL 85 TL WW

Artech Tenus Round Trimless Fixed Downlight

Artech Tenus recessed architectural fixed LED downlight with ingress protection IP44. Total luminous flux up to 500 lm with overall luminaire efficacy of 79 lm/W. Supplied with fixed output, DALI digital or phase-cut dimmable driver, optional 3 -hour Basic or EMPRO emergency kit. Forged aluminum heat sink with die-cast white or black bezel

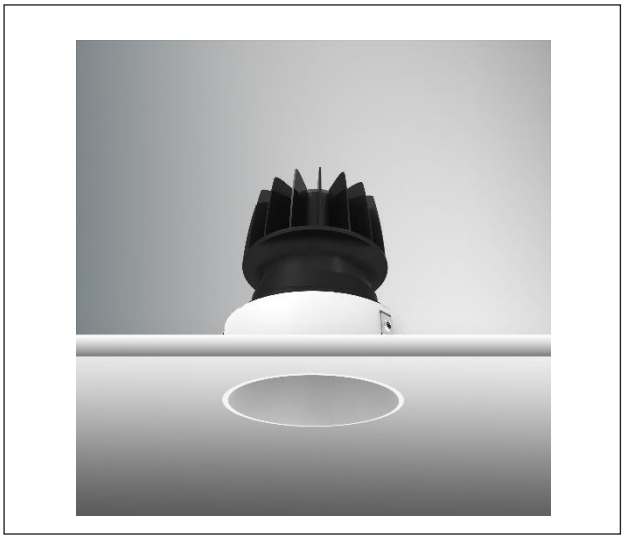

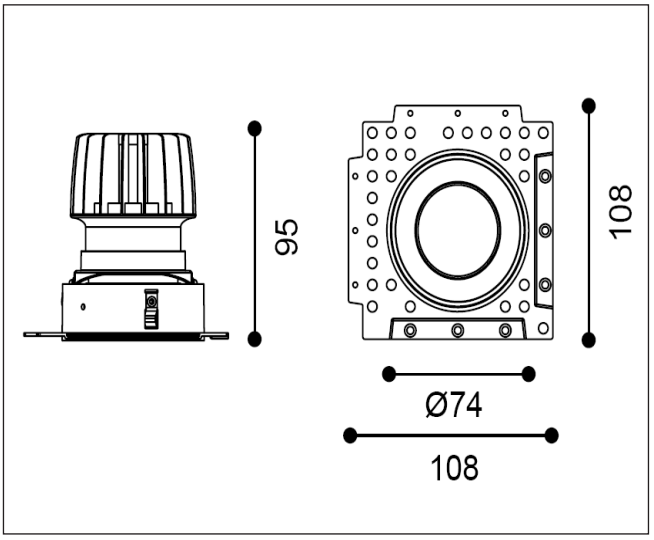

Mounting	Recessed (Trimless)
Lamp Type	LED
Wattage	6.3 W
Lumen Output	500 lm
Efficacy	79 lm/W
Colour Temperature	3000 K
CRI	90+
Beam Angle/ Optic	38˚/ Clear
IP Rating	IP44
Control Gear	Fixed Output
Dimensions	85 Dia x 95 mm
Colour Finish	White/ White
MacAdam	3
Service Lifetime	L80/B10-55,000 Hrs

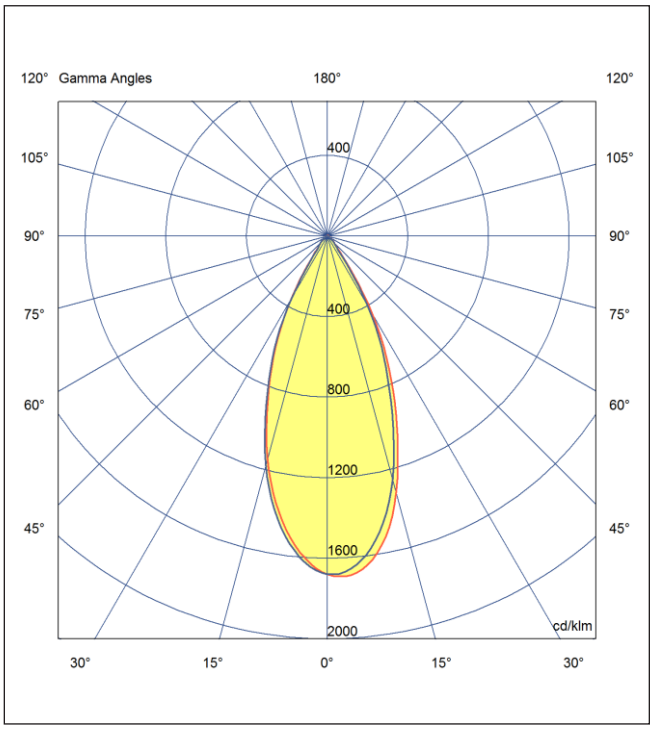

Artech lighting strives to ensure all solutions are supplied with the latest technology, we therefore reserve the right to make technical and design changes without prior notice. Electrical connected load and luminous flux are subject to initial tolerance of up +/- 10%.Colour Temperature is subject to a tolerance of +/-150 Kelvin

St.JohnsRd,MeadowfieldIndustrialEstate,Durham,Co.Durham,DH78RJ-UnitedKingdom|T:+44(0)1913787960-F:+44(0)1913787909-www.artechlighting.com

MADE IN BRITAIN