TENUS SQUARE FIX

TSF 13 30 12 CL 85 ST WW

Artech Tenus Square Fixed Downlight

Artech Tenus recessed architectural fixed LED downlight with ingress protection IP44. Total luminous flux up to 1300 lm with overall luminaire efficacy of 89 lm/W. Supplied with fixed output, DALI digital or phase-cut dimmable driver, optional 3 -hour Basic or EMPRO emergency kit. Forged aluminum heat sink with die-cast white or black bezel

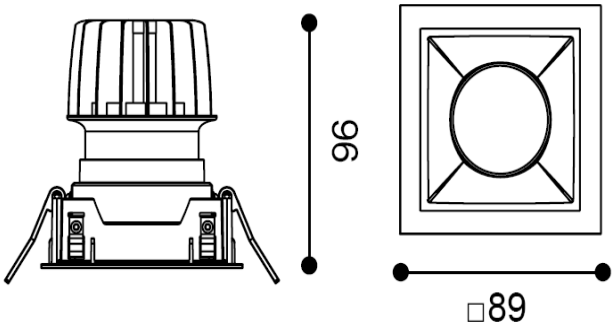

Mounting	Recessed (With Trim)
Lamp Type	LED
Wattage	14.6 W
Lumen Output	1300 lm
Efficacy	89 lm/W
Colour Temperature	3000 K
CRI	90+
Beam Angle/ Optic	12°/ Clear
IP Rating	IP44
Control Gear	Fixed Output
Dimensions	89 x 89 x 96 mm
Colour Finish	White/ White
MacAdam	3
Service Lifetime	L80/B10-55,000 Hrs

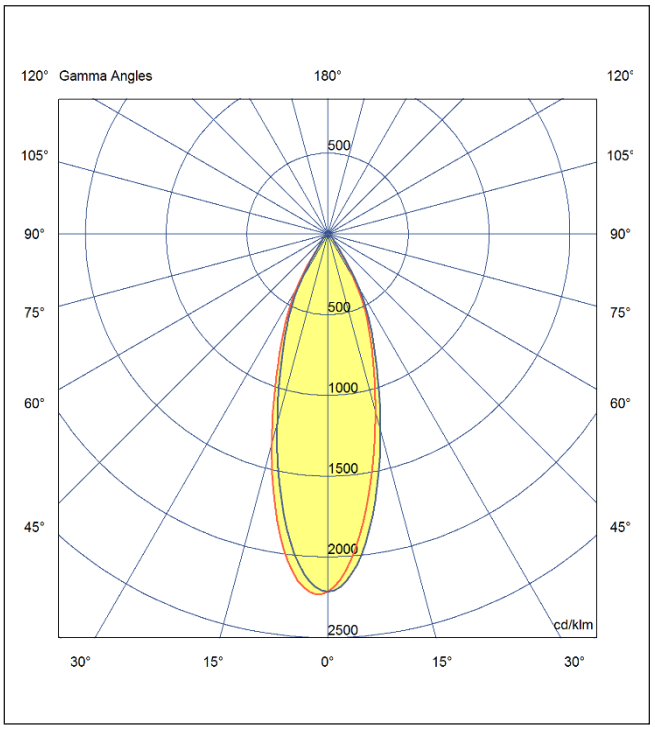

Artech lighting strives to ensure all solutions are supplied with the latest technology, we therefore reserve the right to make technical and design changes without prior notice. Electrical connected load and luminous flux are subject to initial tolerance of up +/- 10%.Colour Temperature is subject to a tolerance of +/-150 Kelvin

St.JohnsRd,MeadowfieldIndustrialEstate,Durham,Co.Durham,DH78RJ-UnitedKingdom|T:+44(0)1913787960-F:+44(0)1913787909-www.artechlighting.com

MADE IN BRITAIN