TENUS

TSN 07 30 60 CL 218 ST WWB

Artech Tenus Snoot Square Fixed Downlight

Artech Tenus recessed architectural fixed LED downlight with ingress protection IP44. Total luminous flux up to 700 lm with overall luminaire efficacy of 84 lm/W. Supplied with fixed output, DALI digital or phase-cut dimmable driver, optional 3 -hour Basic or EMPRO emergency kit. Forged aluminum heat sink with die-cast white or black bezel.

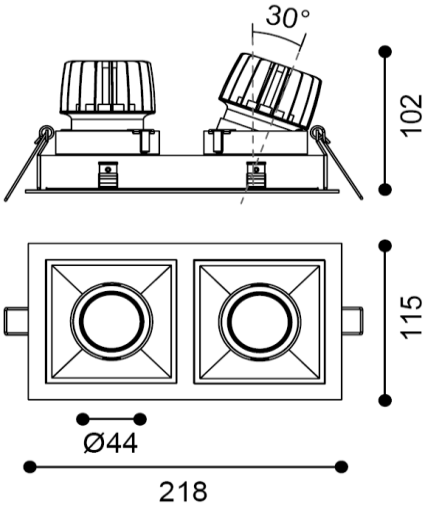

Mounting	Recessed With Trim
Lamp Type	2x LED
Wattage	2 x 8.4 W
Lumen Output	2 x 700 lm
Efficacy	84 lm/W
Colour Temperature	3000 K
CRI	90+
Beam Angle	60°
IP Rating	IP44
Control Gear	Fixed Output
Dimensions	218 x 115 x 102 mm
Colour Finish	White/ White/ Black
MacAdam	3
Service Lifetime	L80/B10- 55,000 Hrs

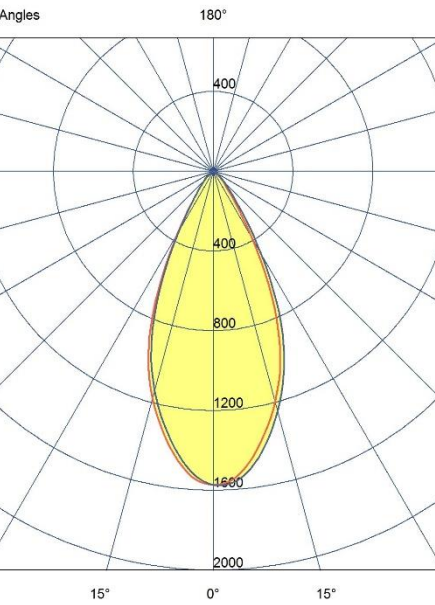

powered by

TRIDONIC

Driver details available upon request

Artech lighting strives to ensure all solutions are supplied with the latest technology, we therefore reserve the right to make technical and design changes without prior notice. Electrical connected load and luminous flux are subject to initial tolerance of up +/- 10%.Colour Temperature is subject to a tolerance of +/-150 Kelvin

St.JohnsRd,MeadowfieldIndustrialEstate,Durham,Co.Durham,DH78RJ-UnitedKingdom|T:+44(0)1913787960-F:+44(0)1913787909-www.artechlighting.com

MADE IN BRITAIN