PROLIGHT

APL 78 40 PC C S

Artech Prolight Surface Mounted Luminaire

Artech Prolight architectural LED luminaire with ingress protection IP66. Total luminous flux up to 7800 lm with overall luminaire efficacy up to 140 lm/W. Supplied with fixed output, DALI digital dimmable driver, optional 3 – hour Basic or EMPRO emergency kit. Steel housing with polycarbonate diffuser.

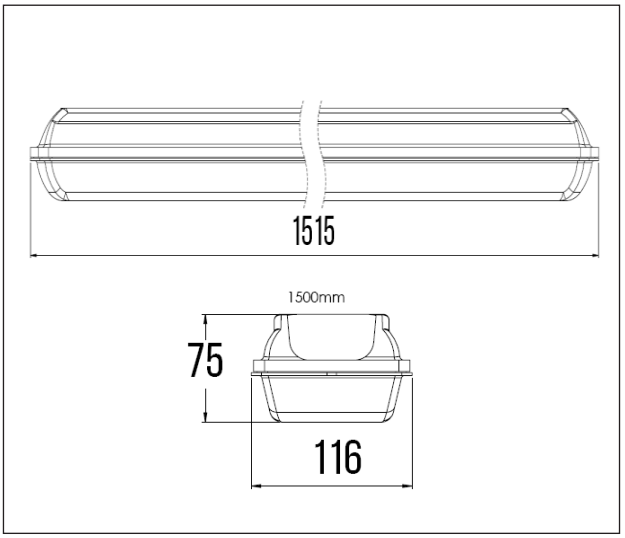

Mounting	Surface
Lamp Type	LED
Wattage	55.7 W
Lumen Output	7800 lm
Efficacy	140 lm/W
Colour Temperature	4000 K
CRI	80+
Optic	Polycarbonate
IP Rating	IP66
Control Gear	Fixed output
Dimension	1515 x 116 x 75 mm
Colour Finish	Grey
MacAdam	3
Service Lifetime	L80/B10-50,000 Hrs

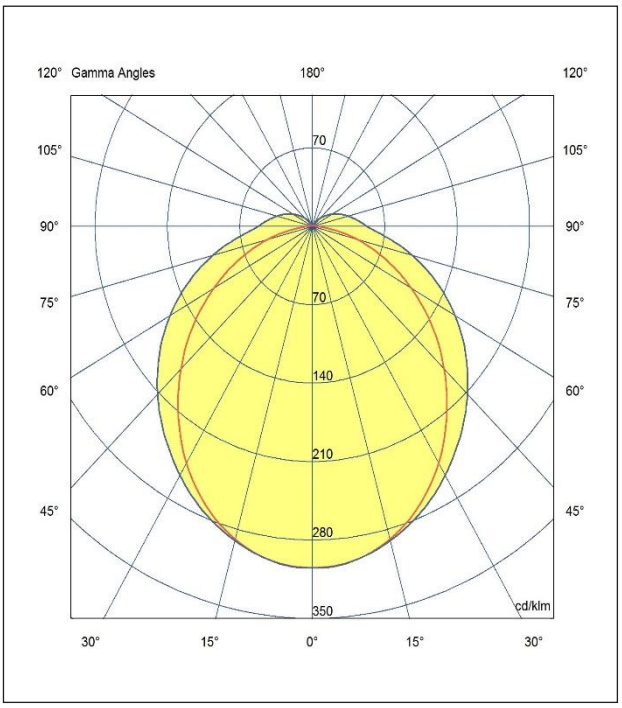

powered by

TRIDONIC

Driver details available upon request

Artech lighting strives to ensure all solutions are supplied with the latest technology, we therefore reserve the right to make technical and design changes without prior notice. Electrical connected load and luminous flux are subject to initial tolerance of up +/- 10%. Colour Temperature is subject to a tolerance of +/-150 Kelvin

St Johns Rd, Meadowfield Ind. Estate, Durham, Co. Durham, DH7 8RJ – United Kingdom T: +44(0) 191 3787960 E: info@artechlighting.com W: www.artechlighting.com

MADE IN BRITAIN