TENUS IP65

TR6 16 30 60 CL 202 ST W

Artech Tenus Round IP65 Fixed Downlight

Artech Tenus recessed architectural fixed LED downlight with ingress protection IP65. Total luminous flux up to 1573 lm with overall luminaire efficacy of 108 lm/W. Supplied with fixed output, DALI digital or phase-cut dimmable driver, optional 3 -hour Basic or EMPRO emergency kit. Forged aluminum heat sink with die-cast white or black bezel

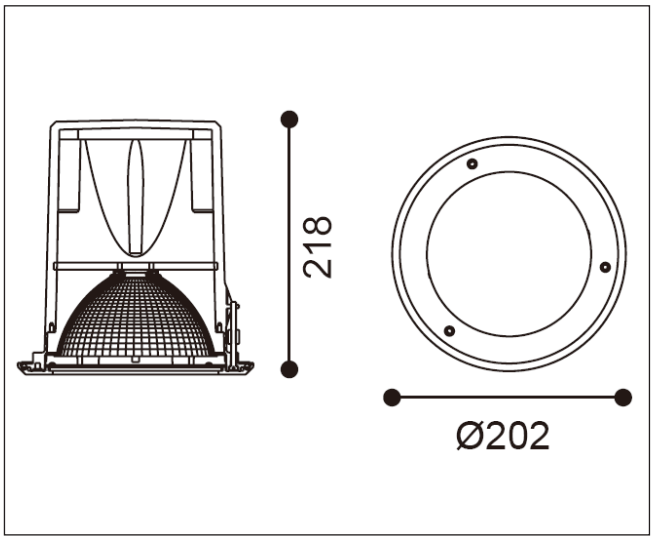

Mounting	Recessed (With Trim)
Lamp Type	LED
Wattage	14.6 W
Lumen Output	1573 lm
Efficacy	108 lm/W
Colour Temperature	3000 K
CRI	90+
Beam Angle	60°
IP Rating	IP65
Control Gear	Fixed Output
Dimensions	202 Dia x 218 mm
Colour Finish	White
MacAdam	3
Service Lifetime	L80/B10-55,000 Hrs

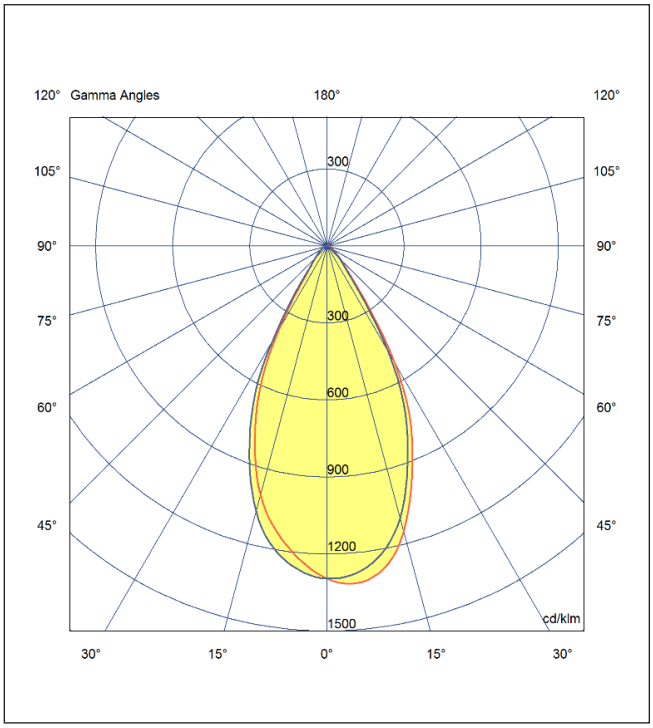

Artech lighting strives to ensure all solutions are supplied with the latest technology, we therefore reserve the right to make technical and design changes without prior notice. Electrical connected load and luminous flux are subject to initial tolerance of up +/- 10%.Colour Temperature is subject to a tolerance of +/-150 Kelvin

St.JohnsRd,MeadowfieldIndustrialEstate,Durham,Co.Durham,DH78RJ-UnitedKingdom|T:+44(0)1913787960-F:+44(0)1913787909-www.artechlighting.com

MADE IN BRITAIN