MAGNA HYBRID

MHM 78 30 38 MD

Artech Magna Hybrid LED

Artech Magna LED module, with high quality injection moulded TIR optic, COB LED, and extruded aluminium heatsink. Various lumen outputs, beam angles and colour temperatures available. 50mm diameter housing. High luminous efficacy up to 80 lm/W.

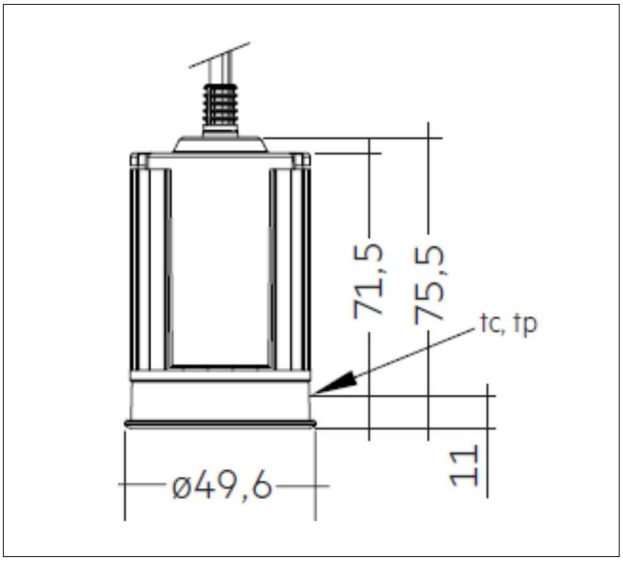

Lamp Type	LED
Wattage	9.8 W
Lumen Output	780 lm
Efficacy	80 lm/W
Colour Temperature	3000 K
CRI	90+
Beam Angle	38˚
Control Gear	Mains Dimmable
Dimension	50 Dia x 75.5 mm
MacAdam	3
Service Lifetime	L80/B10-50,000 Hrs

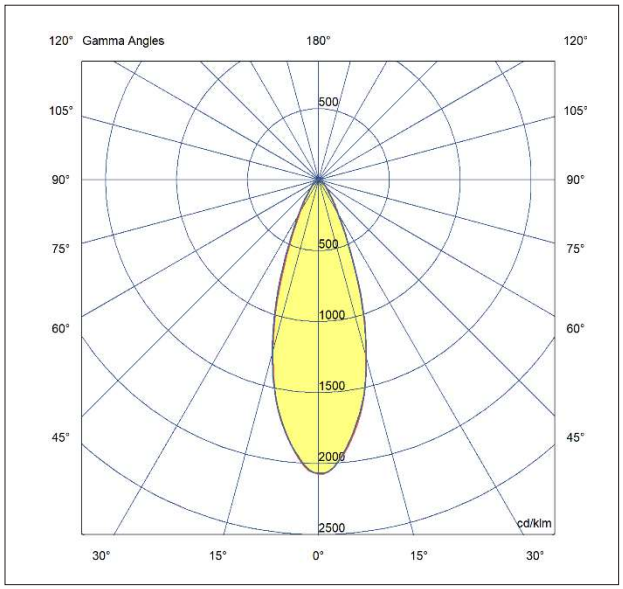

powered by

TRIDONIC

Driver details available upon request

Artech lighting strives to ensure all solutions are supplied with the latest technology, we therefore reserve the right to make technical and design changes without prior notice. Electrical connected load and luminous flux are subject to initial tolerance of up +/- 10%.Colour Temperature is subject to a tolerance of +/-150 Kelvin

St.JohnsRd,MeadowfieldIndustrialEstate,Durham,Co.Durham,DH78RJ-UnitedKingdom|T:+44(0)1913787960-F:+44(0)1913787909-www.artechlighting.com

MADE IN BRITAIN