ASTRA

AST 15 30 38 CL 58 TR B

Artech Astra Track Mounted Luminaire

An elegant directional track spotlight range, with high quality aluminium housing and discrete hinge design allowing for concise adjustment. A range of beam angles are available to suit any spotlighting or general lighting application. Total luminous flux up to 1500 lm with overall luminaire efficacy up to 100 lm/W. Supplied with fixed output, DALI digital dimmable driver, optional 3 – hour Basic or EMPRO emergency kit.

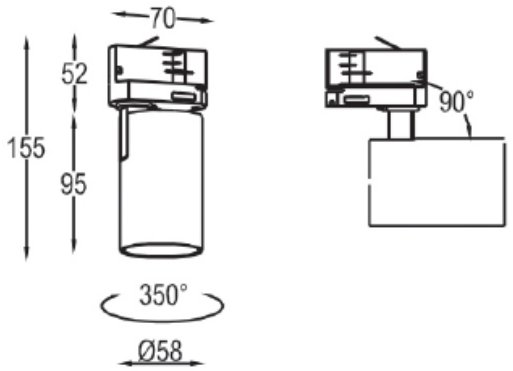

Mounting	Track Mounted
Lamp Type	LED
Wattage	15 W
Lumen Output	1500 lm
Efficacy	100 lm/W
Colour Temperature	3000 K
CRI	90+
Beam Angle/Optic	38°/ Clear
IP Rating	IP20
Control Gear	Fixed Output
Dimension	58 Dia x 155 mm
Colour Finish	Black
MacAdam	3
Service Lifetime	L80/B10 – 50,000 Hrs

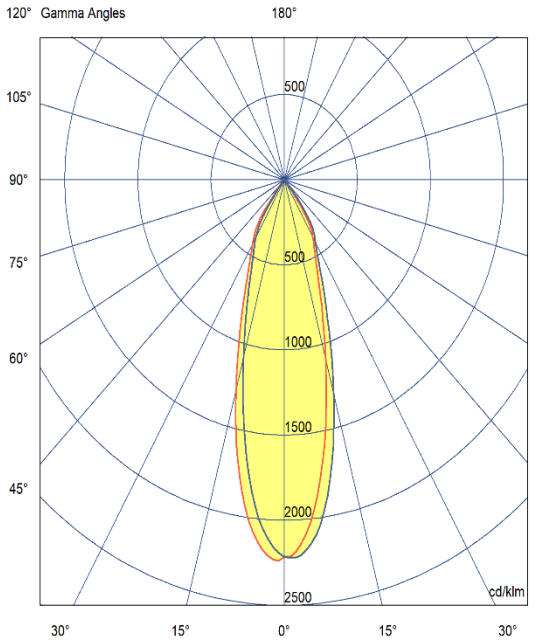

powered by

TRIDONIC

Driver details available upon request

Artech lighting strives to ensure all solutions are supplied with the latest technology, we therefore reserve the right to make technical and design changes without prior notice.
Electrical connected load and luminous flux are subject to initial tolerance of up +/- 10%. Colour Temperature is subject to a tolerance of +/-150 Kelvin

St Johns Rd, Meadowfield Ind. Estate, Durham, Co. Durham, DH7 8RJ – United Kingdom T: +44(0) 191 3787960 E: info@artechlighting.com W: www.artechlighting.com

MADE IN BRITAIN

UK CA